EV West - Vacuum Pump Schematic

Revision 1.1

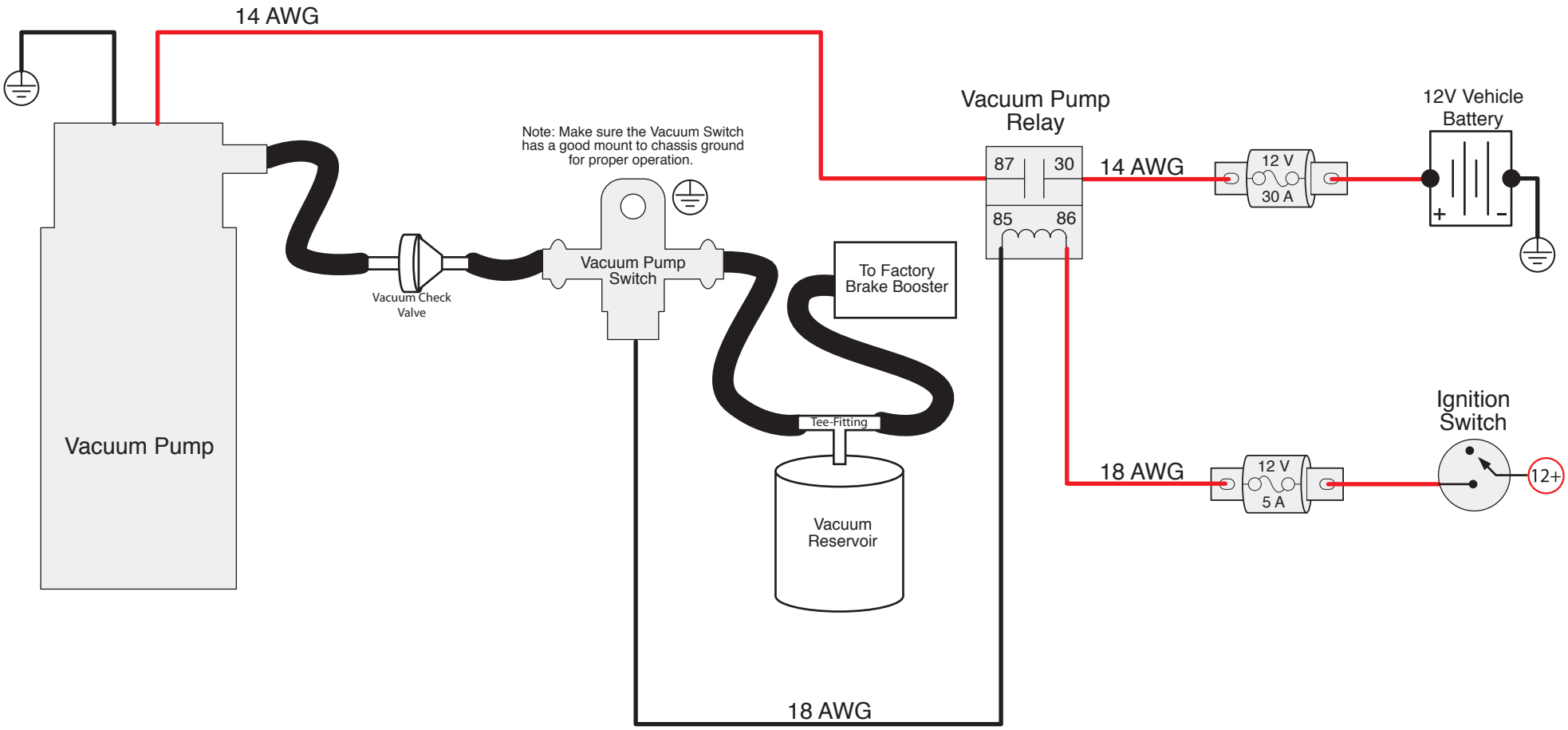

EV WEST